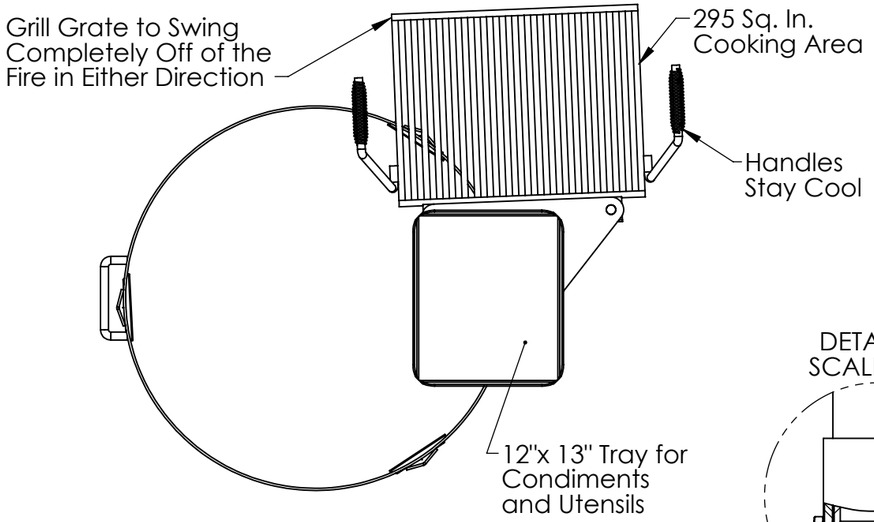

ITEM NO.	PART NUMBER	DESCRIPTION	Fire Ring with Spade Anchors/ QTY.
1	UFR-SA4	GRILL GRATE SWIVEL ASSY	1
2	UFR-SA5	GRILL RING with SPADE ANCHORS	1
3	HFBOLT 0.375-16x3.5x1-N	3/8"-16 x 3 1/2" HEX HEAD BOLT	1
4	LOCKW-3/8	LOCK WASHER 3/8"	1
5	HNUT 0.3750-16-D-N	HEX NUT 0.3750-16	1
6	UFR-SA1	2 3/8" SWIVEL GRATE PIVOT TUBE ASSY	1

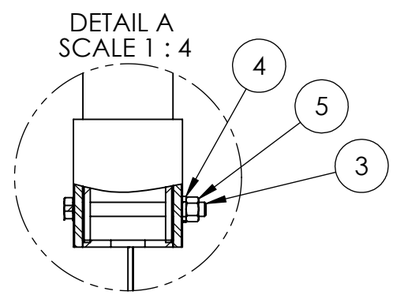

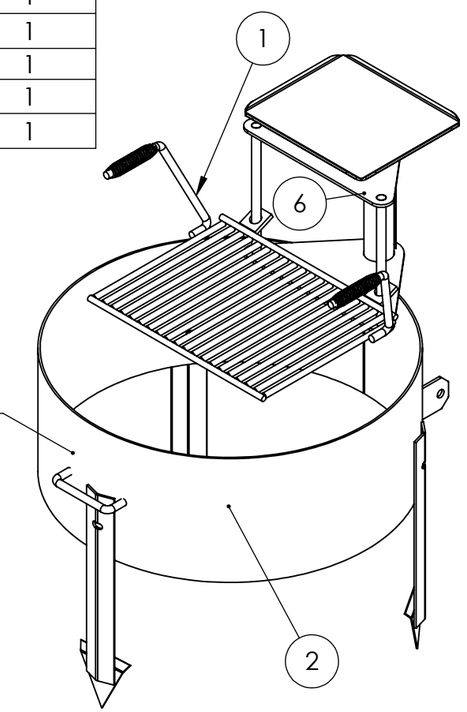

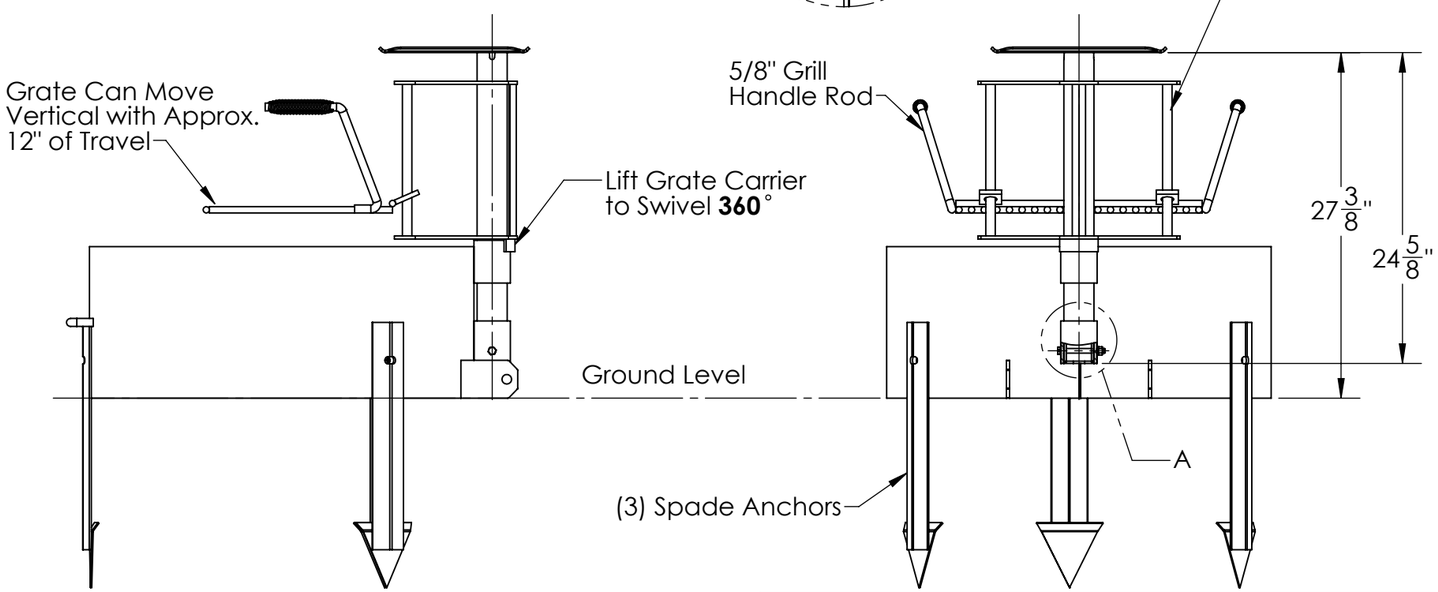

7 GA. Sheet Metal Ring 30" Dia. Painted Black with Heat and Rust Resistant Enamel

The Fully Adjustable Grate Allows for the Ultimate Grilling and Cooking Experience. The Grate Height is Infinitely Adjustable.

The Handles Being Well Away From the Heat Allow You to Make Adjustments at Any Time. If You Have Strategically Placed Items on the Grill Surface, You Can Swing the Grate in Either Direction to Change the Hot Spot on The Grill.

When You Are Done Cooking, You Can Swing the Grate to the Side and Enjoy an Open Fire Ring.

Tilt Back Design Allows for Easy Clean Out of the Pit Area.

GENERAL NOTES:

UNLESS OTHERWISE SPECIFIED:
DIMENSIONS ARE IN INCHES
TOLERANCES:
FRACTIONAL ± 1/32
BEND ± 1/2°
THREE PLACE DECIMAL ± .005
Do Not Scale Drawing
MATERIAL

	NAME	DATE
DRAWN	DAT	2/9/2012
CHECKED		
ENG APPR.		
MFG APPR.		
Last Saved	6/4/2015 4:35:34 PM	

COMMENTS:

WGT: 102 Lbs.

SHEET 1 OF 1

K Industries, Inc.

TITLE:

DESC. UFR30SAS FINAL ASSEMBLY

S:\CADDRWGS\Solidworks\Grills\UF\

SIZE B | PART NO. UFR30SAS | REV

Path to Part or Assy - UFR30SAS S:\CADDRWGS\Solidworks\Grills\UF\

Fire Ring with Spade Anchors