Furniture Leisure
Commercial Site Furnishings

FurnitureLeisure.com PoolFurnitureSupply.com
PicnicFurniture.com PicnicTableSupplier.com
ParkTables.com UBrace.com

1-800-213-2401 | sales@furniturelsiesure.com

Happy Hollow

Inventory List and Install Guide

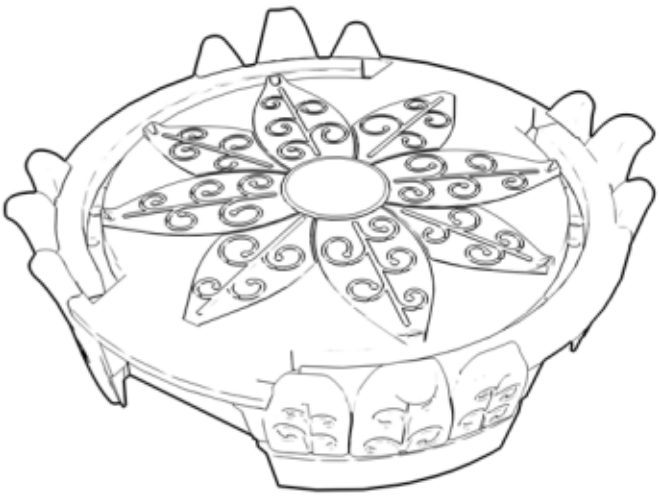

HH01
Quantity: 1

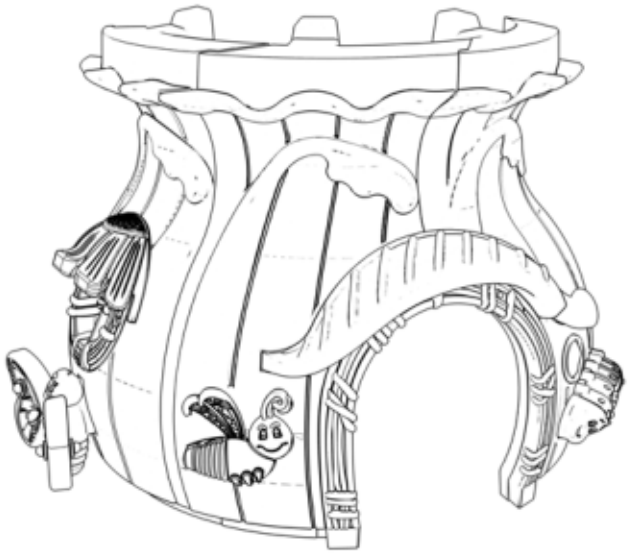

HH02
Quantity: 1

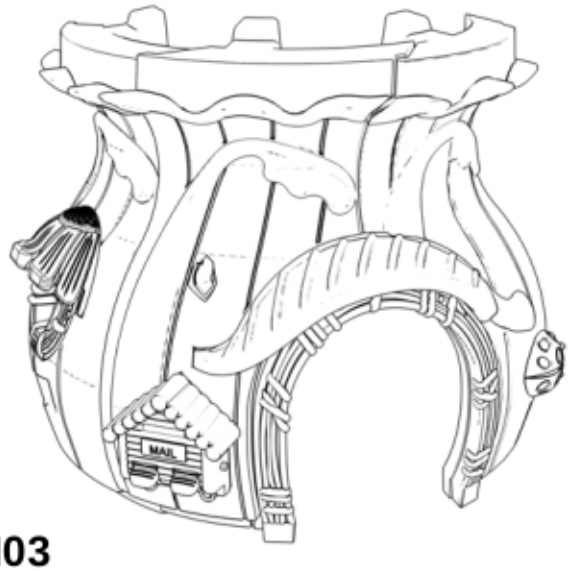

HH03
Quantity: 1

HH04
Quantity: 3

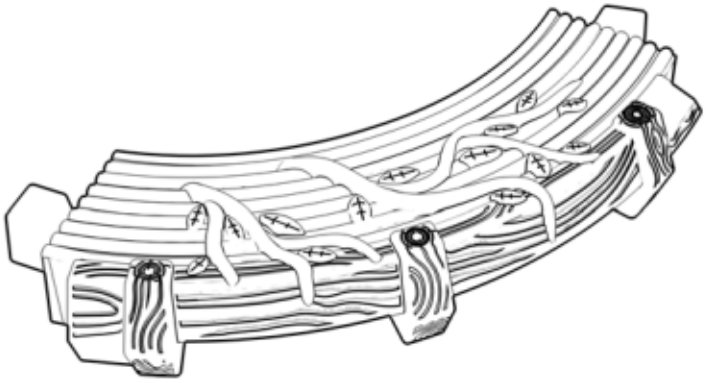

HH05
Quantity: 1

HH06
Quantity: 1

HH07
Quantity: 1

HH08
Quantity: 1

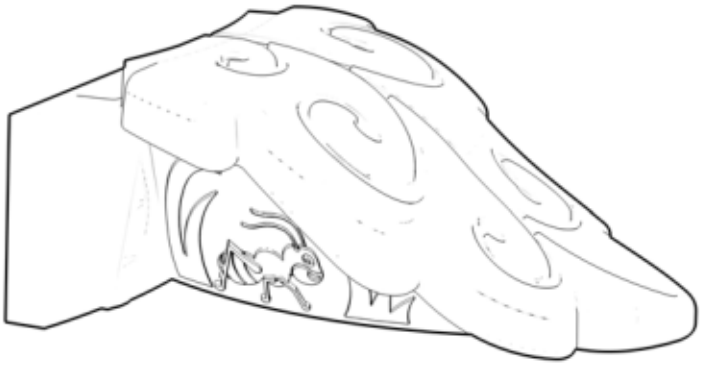

HH09
Quantity: 1

HH10
Quantity: 1

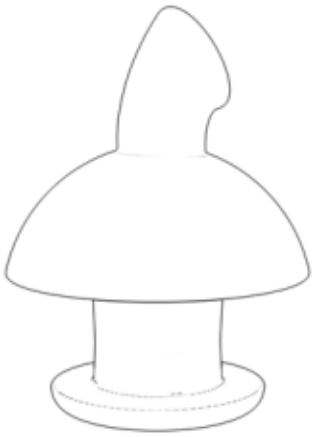

HH11
Quantity: 1

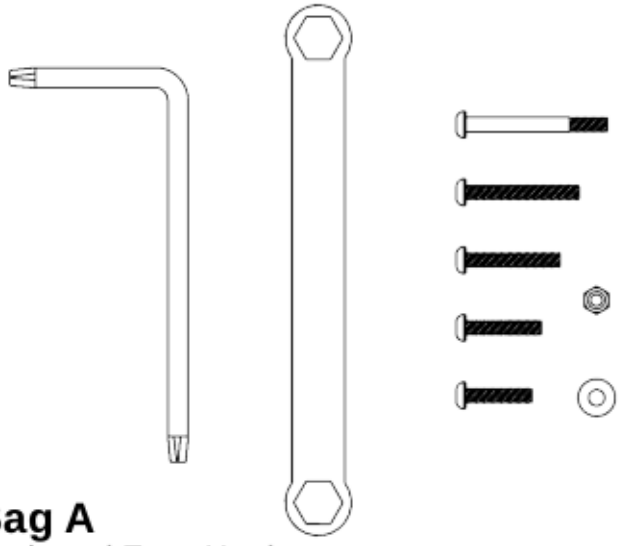

Bag A
Tools and Extra Hardware

* We recommend that you DO NOT use power tools during the assembly of the Happy Hollow

Shown to-scale

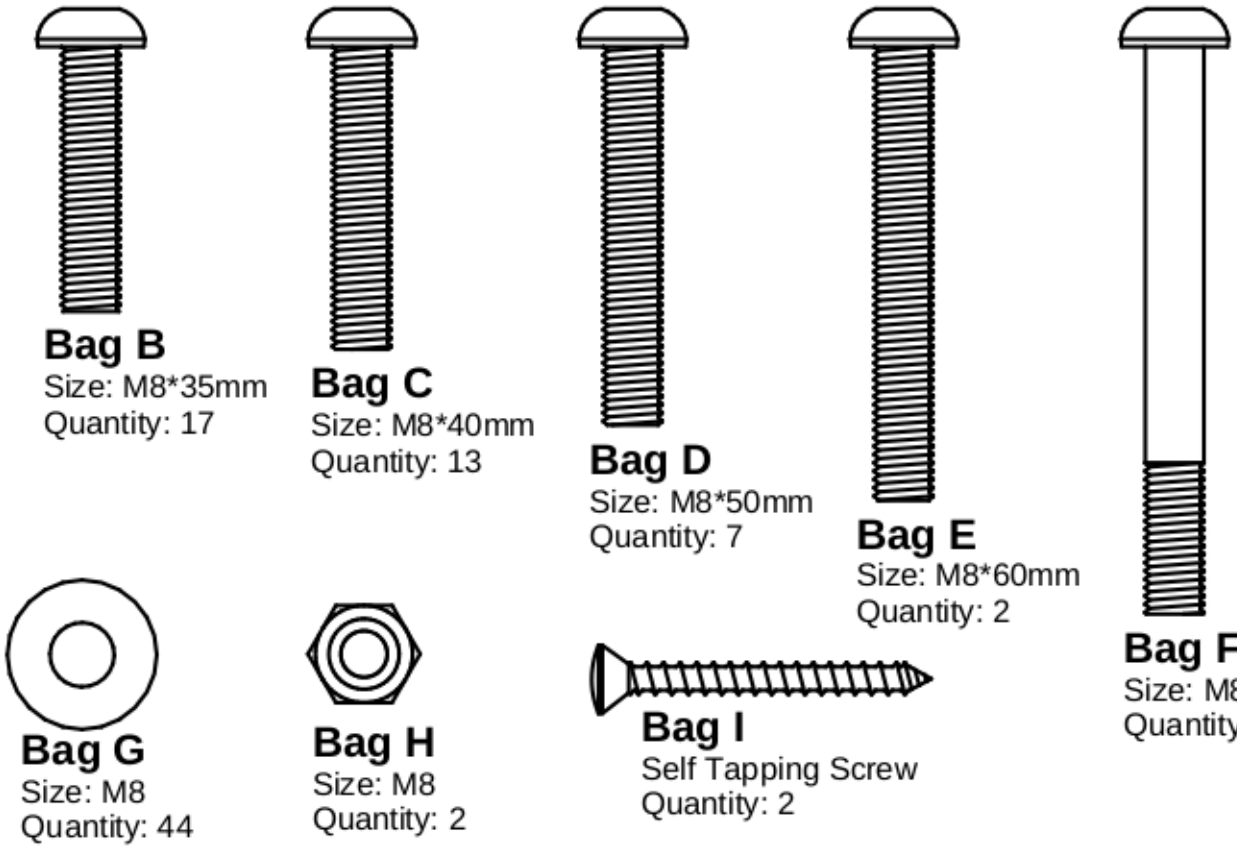

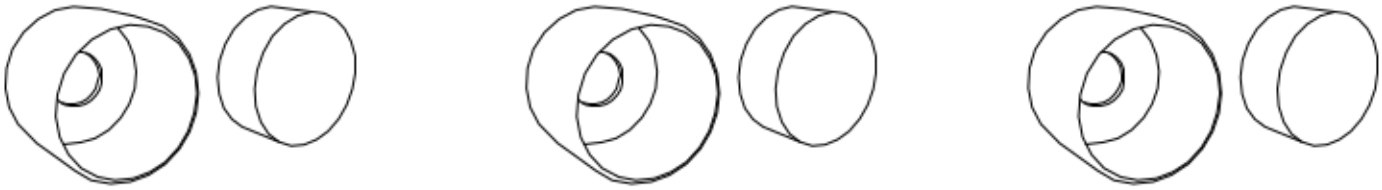

Bag J
Color: Light Blue
Quantity: 10

Bag K
Color: Light Green
Quantity: 12

Bag L
Color: Dark Green
Quantity: 8

Optional Mounting Packages
Sold Separately

In-Ground Mounting Package

In-Ground Mounting Stakes
Qty: 4

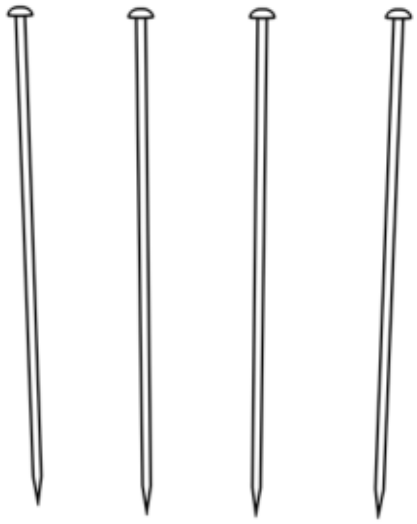

Recommended Tools:
Hammer

Surface Mounting Package

Surface Mounting Plates
Qty: 4

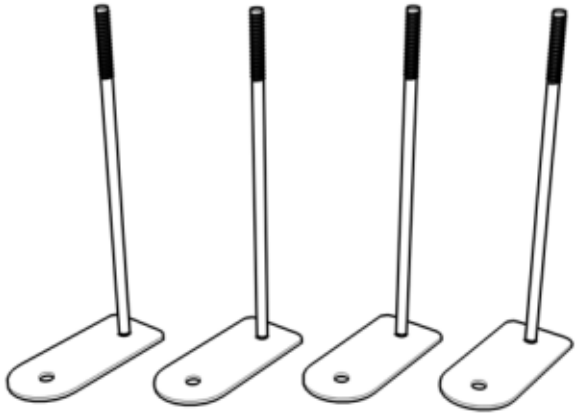

M10 Washer
Qty: 4

M10 Locking Nut
Qty: 4

Recommended Tools:
Socket Wrench
17mm Deep Well Socket

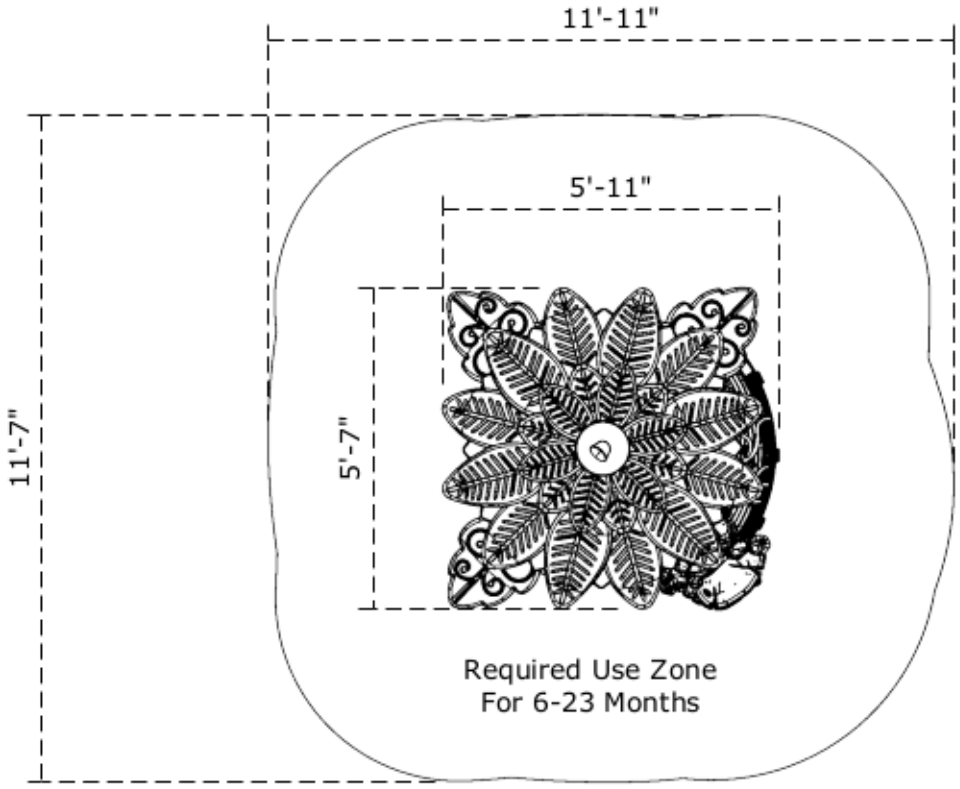
11'-11"
5'-11"
11'-7"
5'-7"
Required Use Zone
For 6-23 Months

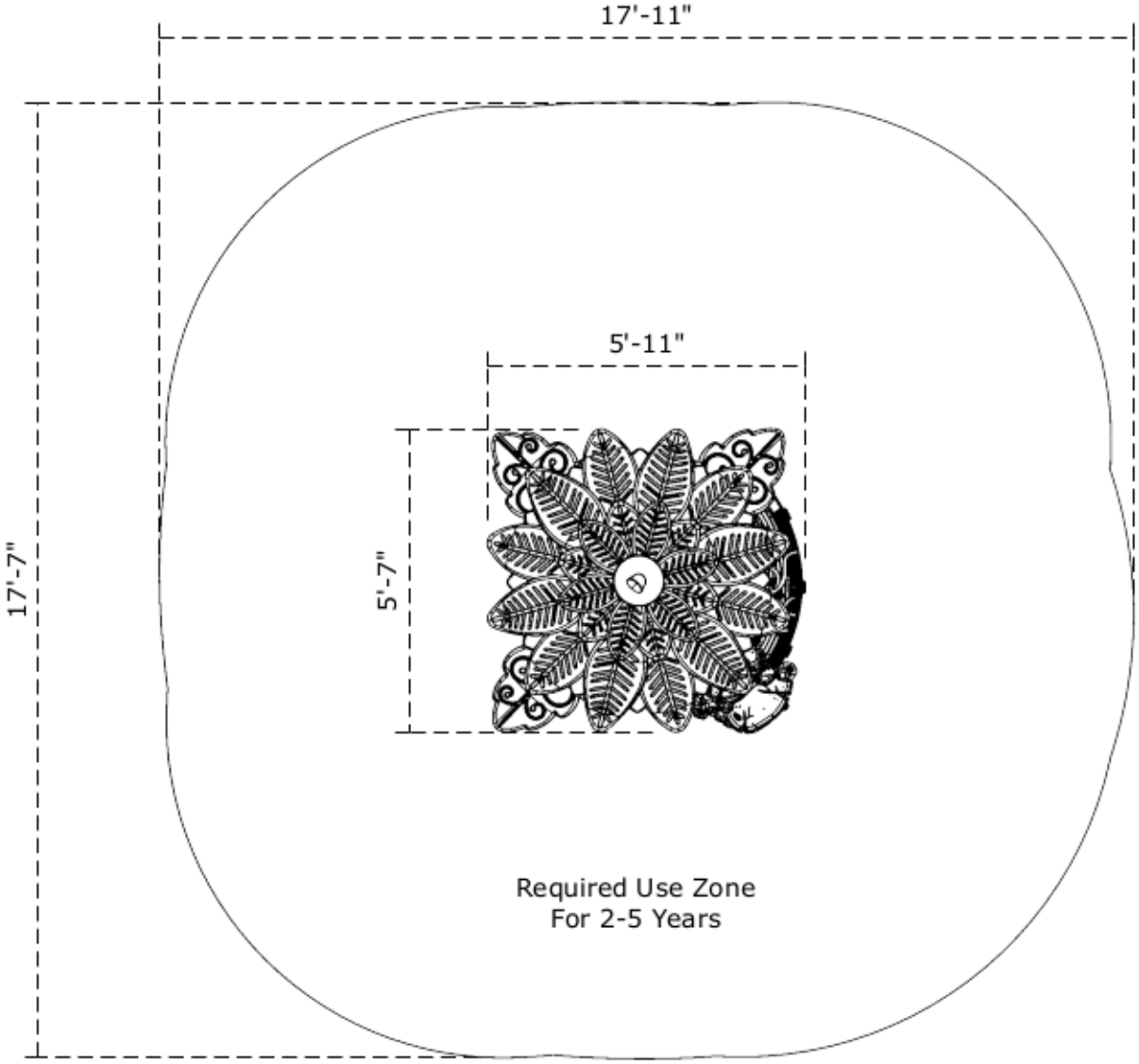
17'-11"
5'-11"
17'-7"
5'-7"
Required Use Zone
For 2-5 Years

1

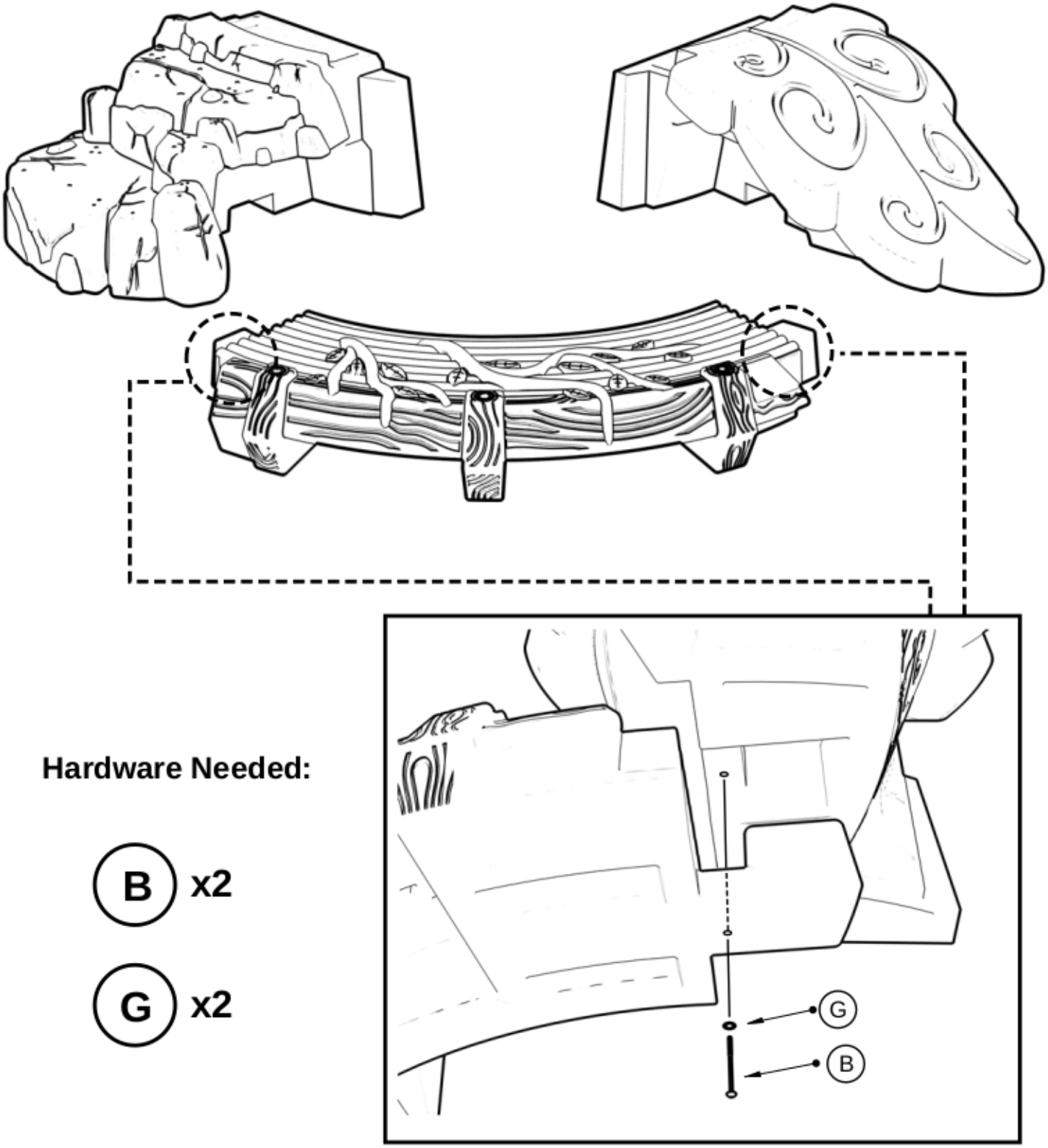

Hardware Needed:

B x2

G x2

2

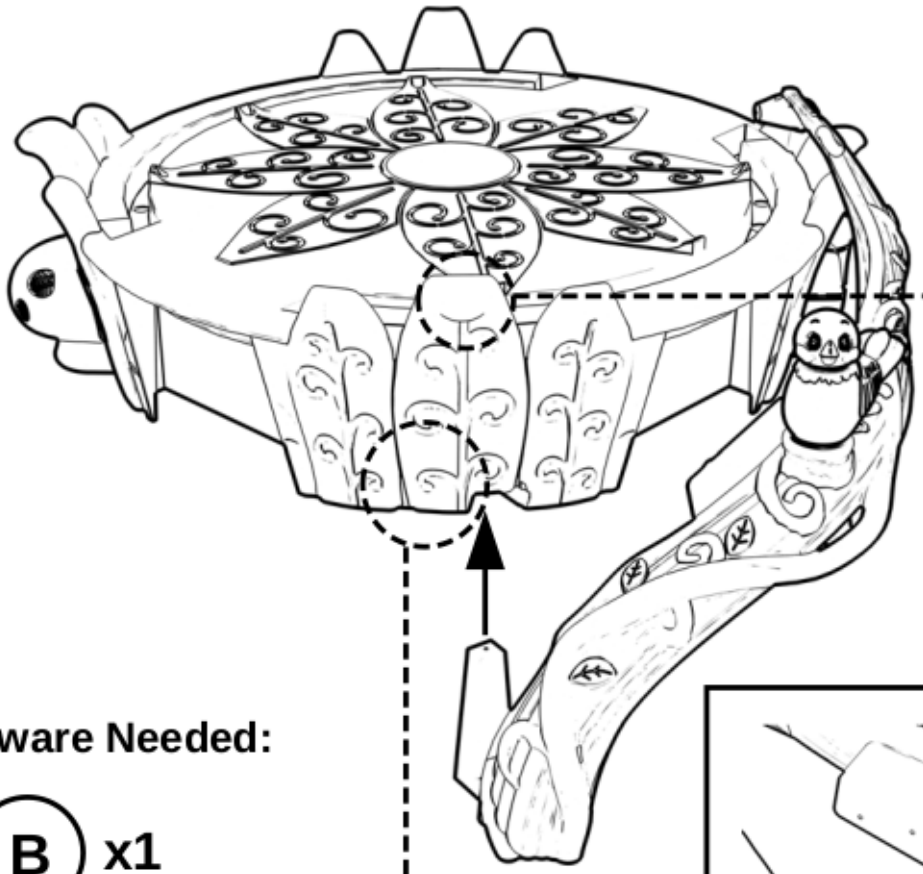

Hardware Needed:

- B x1
- D x1
- G x2

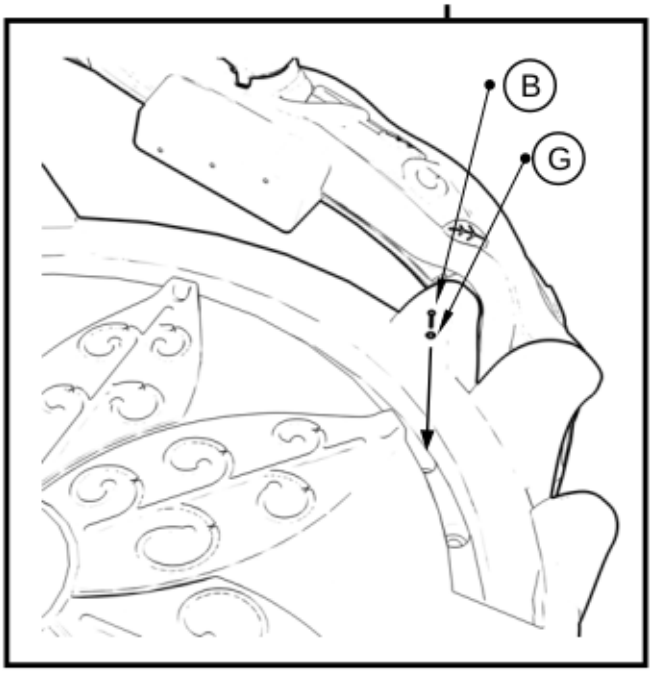

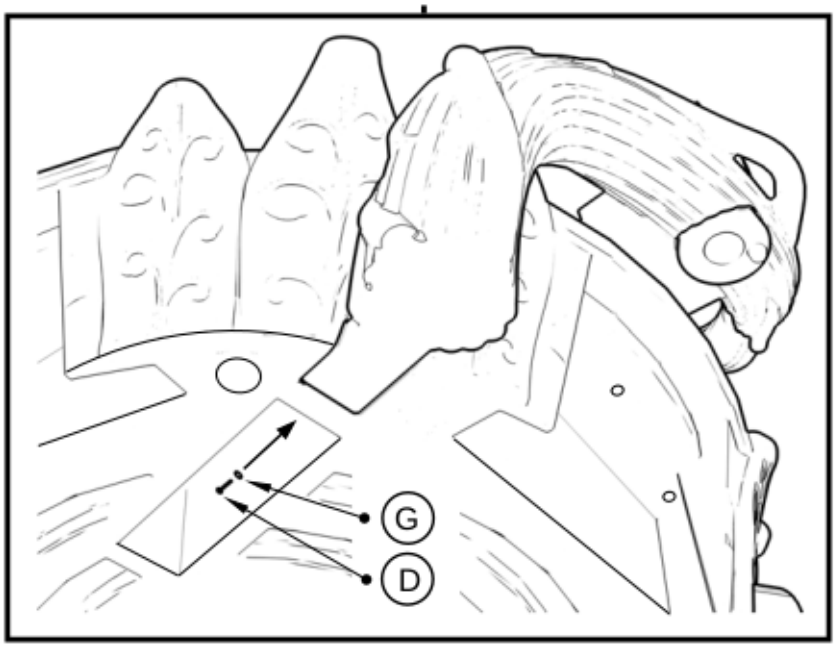

3a

Hardware Needed:

B x4

G x4

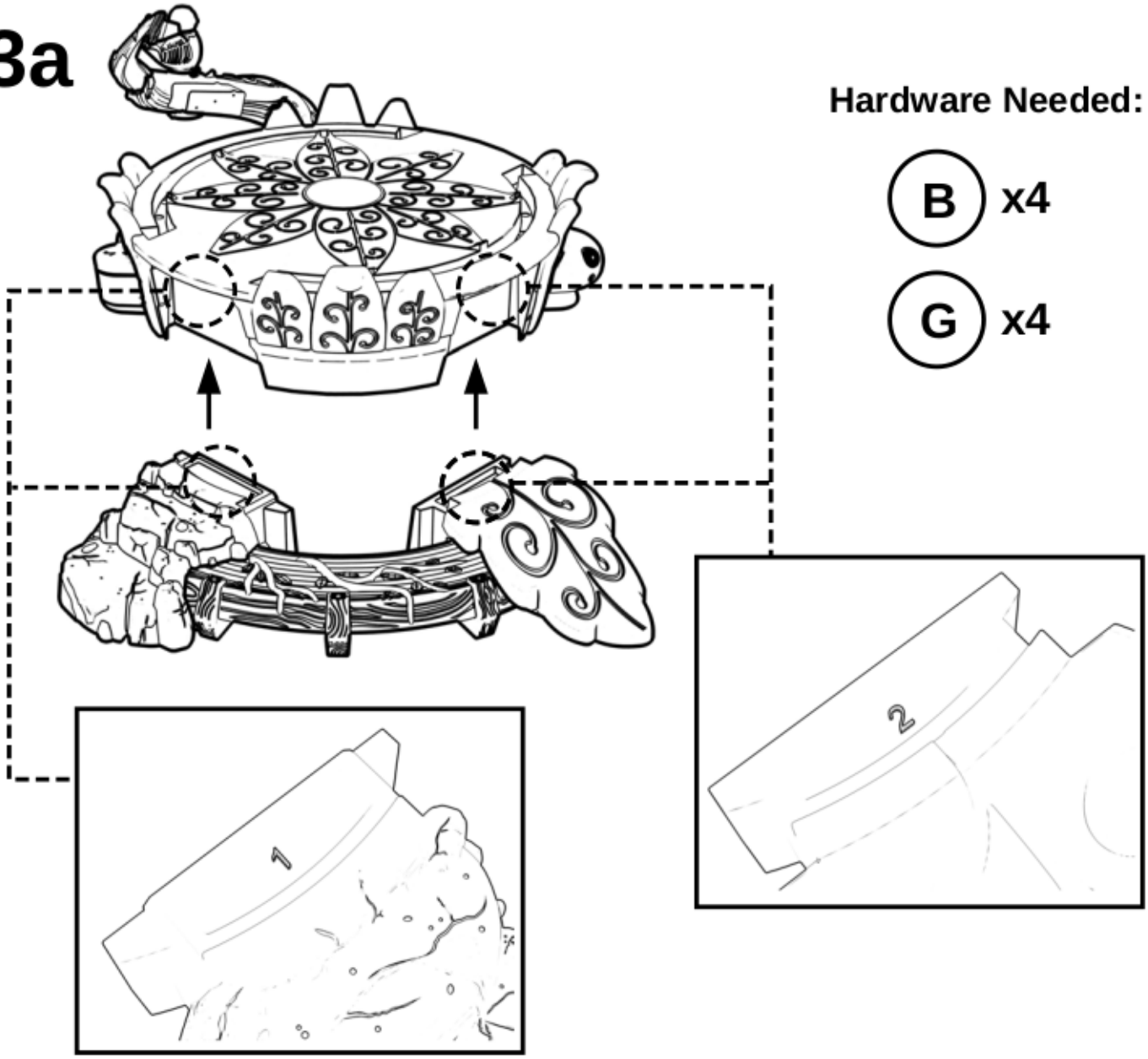

3b

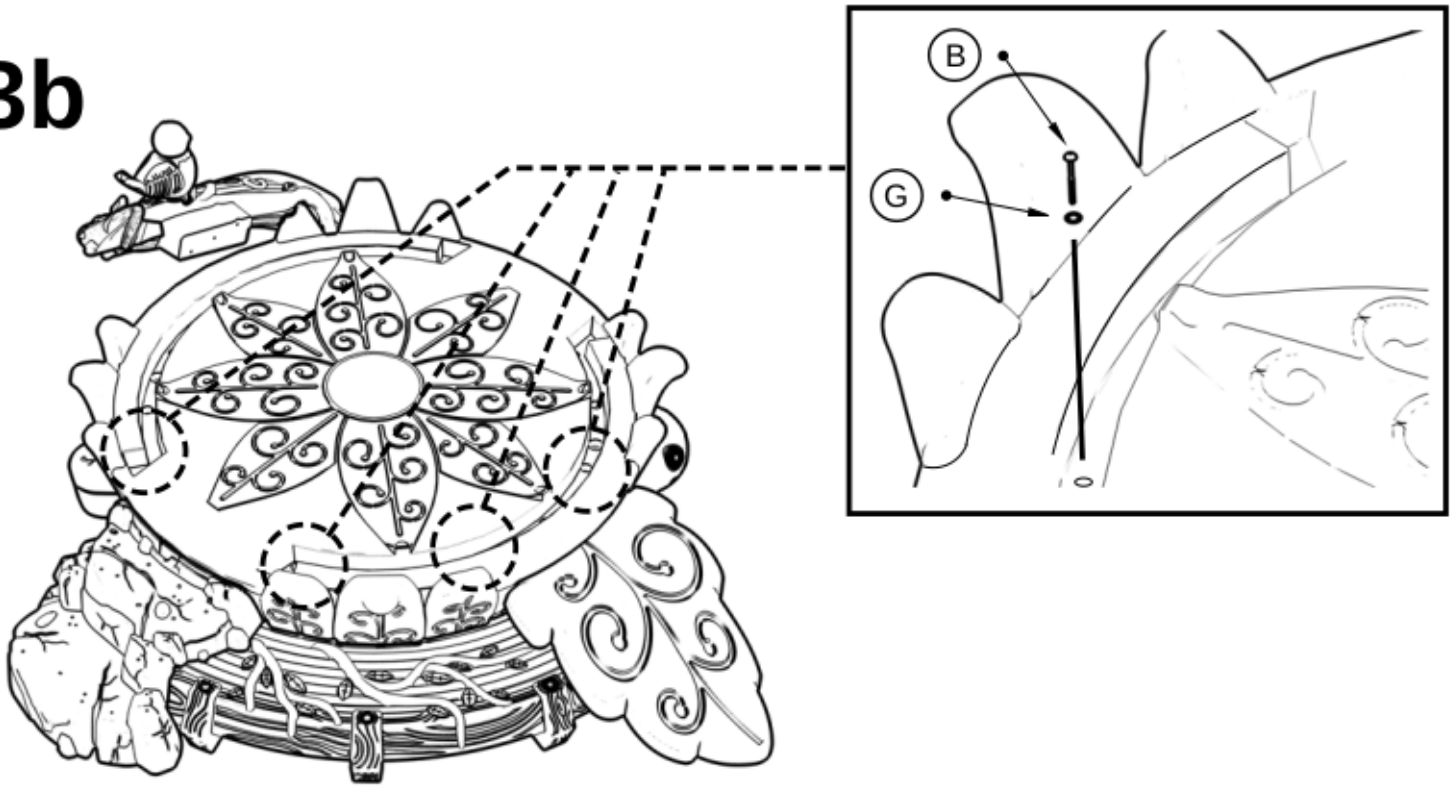

4a

Hardware Needed:

B x4

G x4

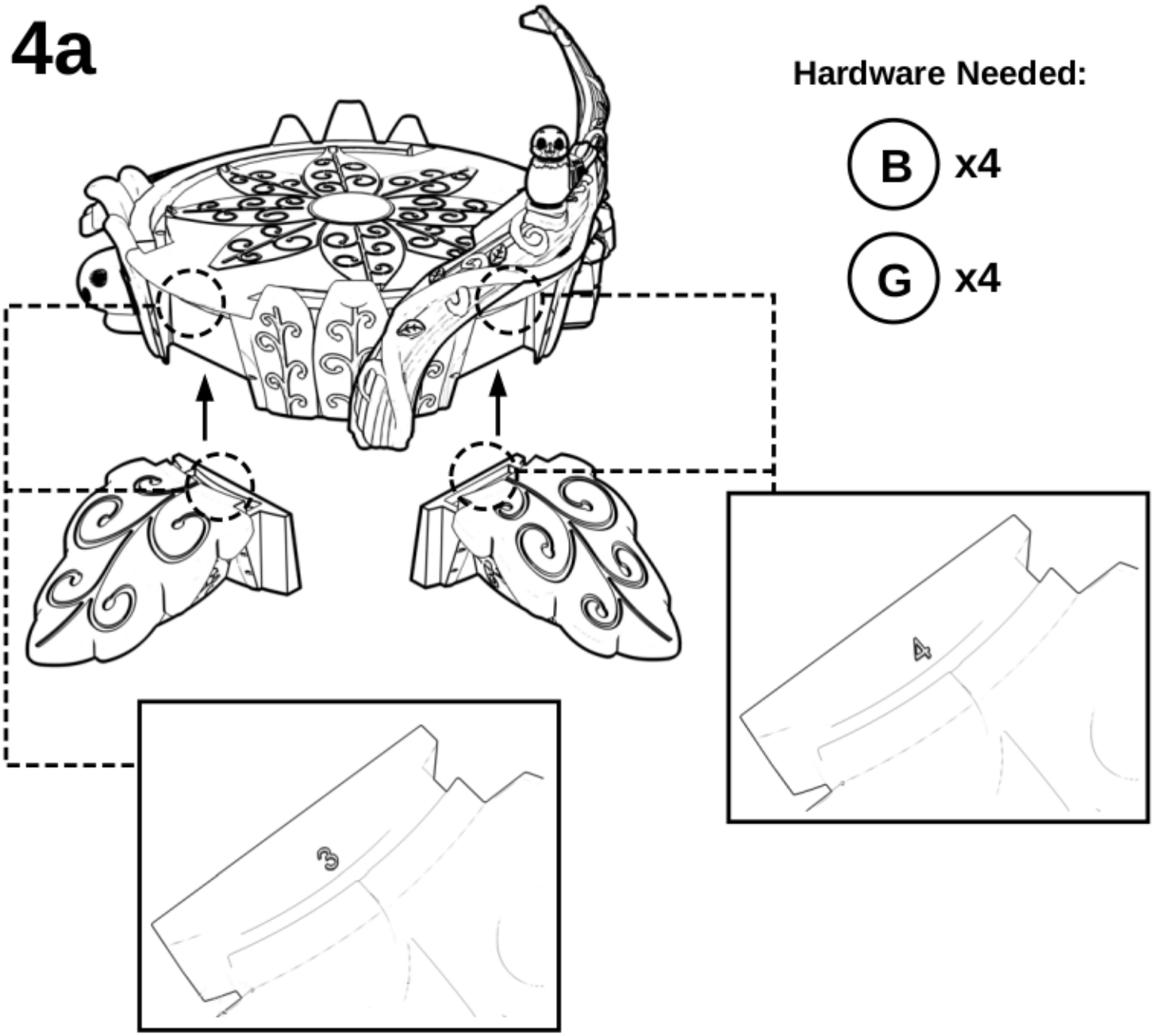

4b

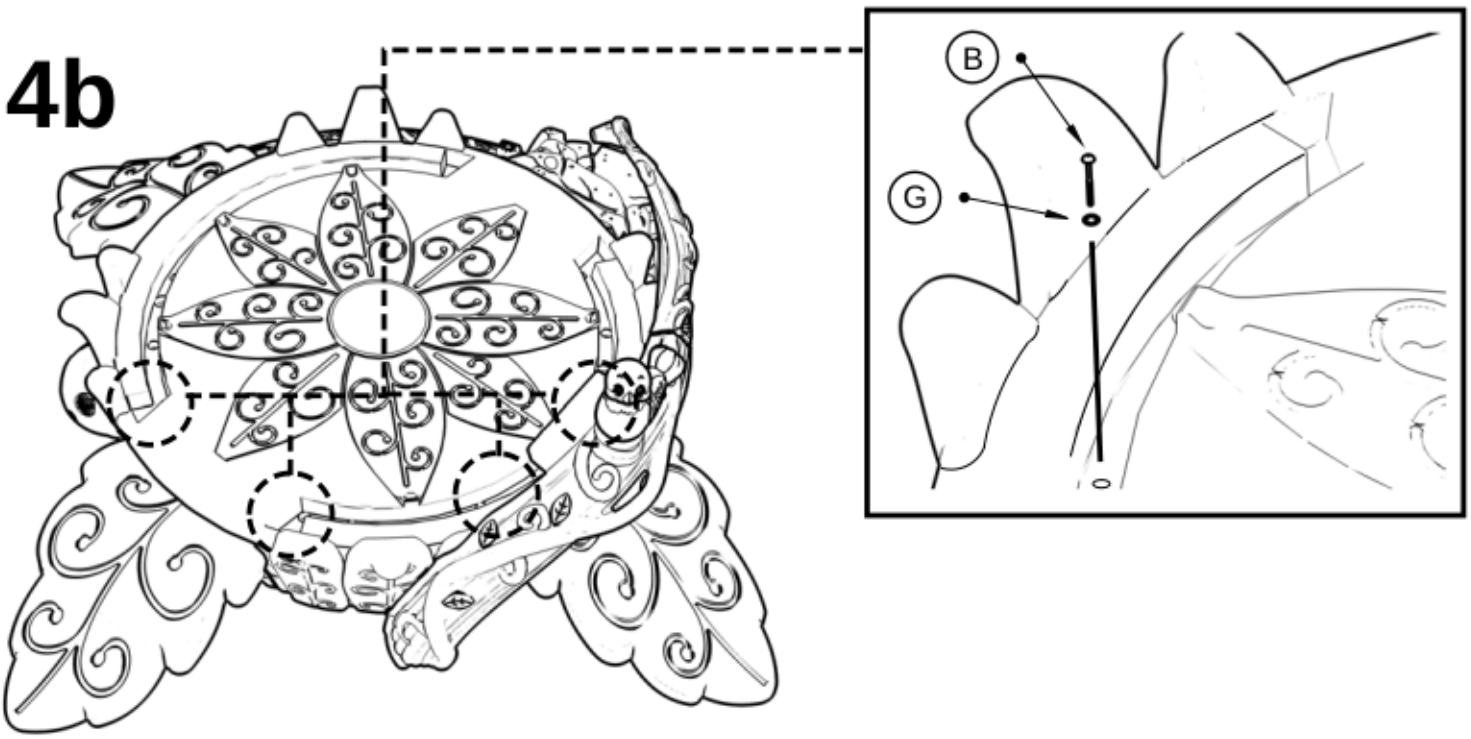

5 Optional Mounting Methods

Mount Packages
Sold Separately

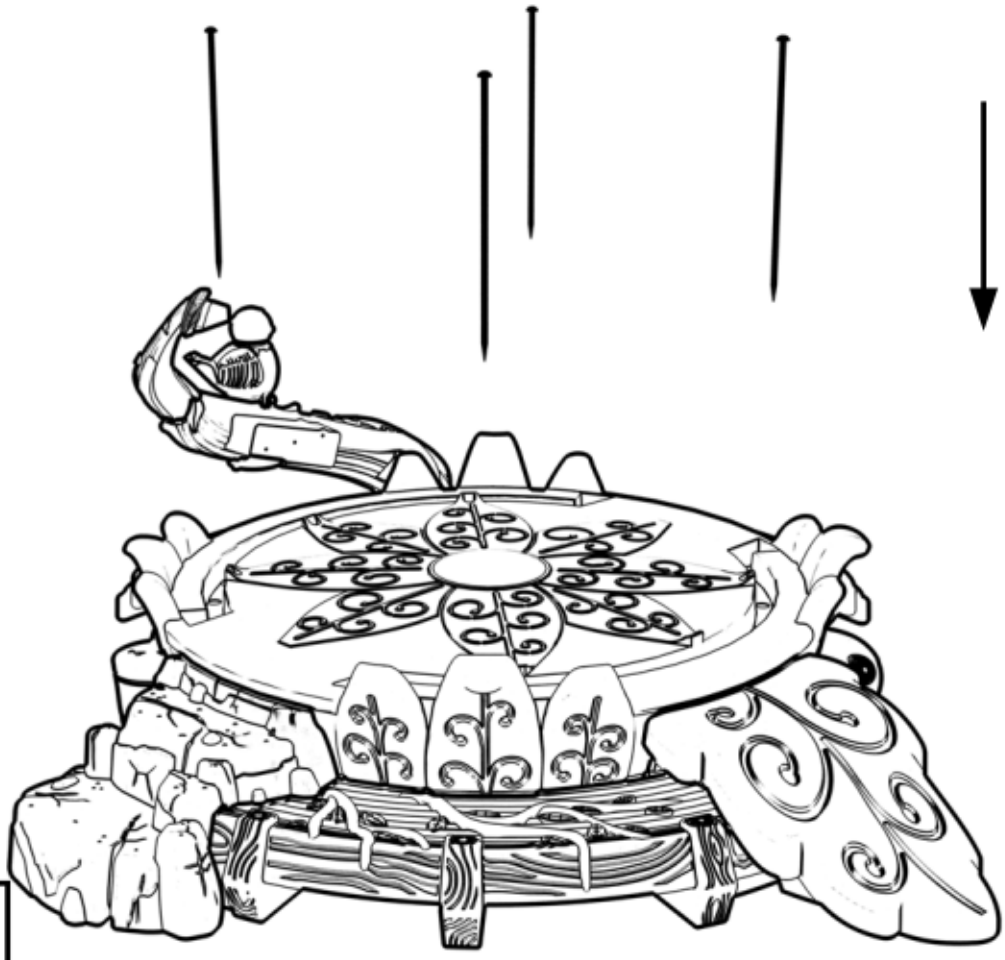

In-Ground Mounting Method

OR

Surface Mount Mounting Method

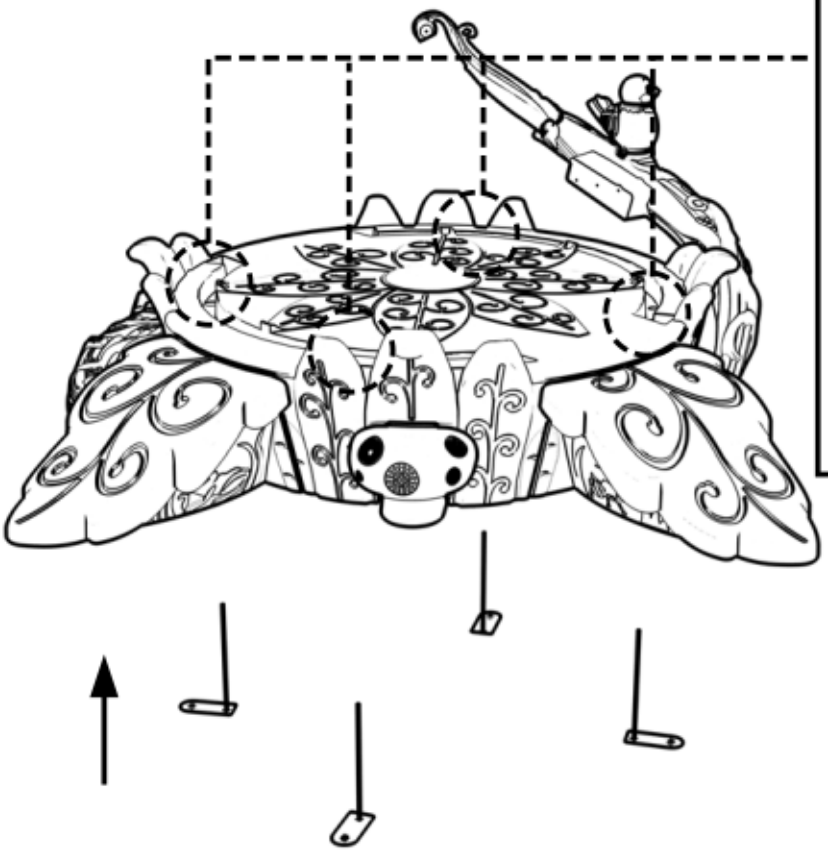

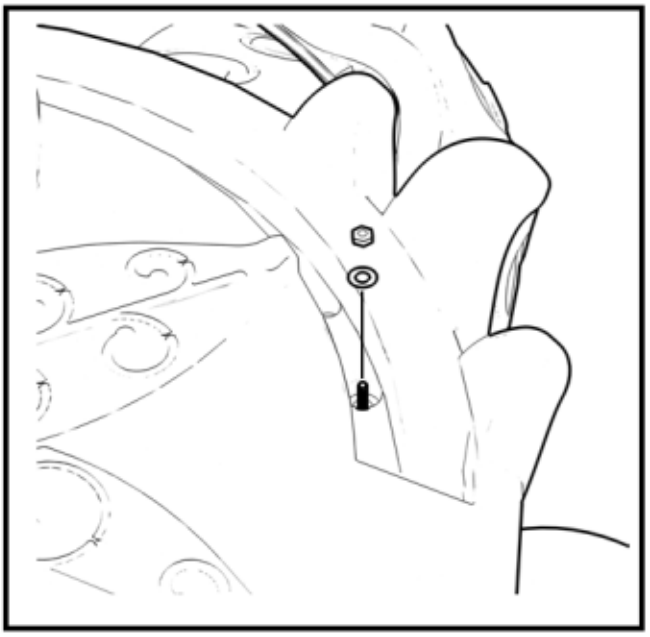

Hardware packaged with
the mounting brackets

6

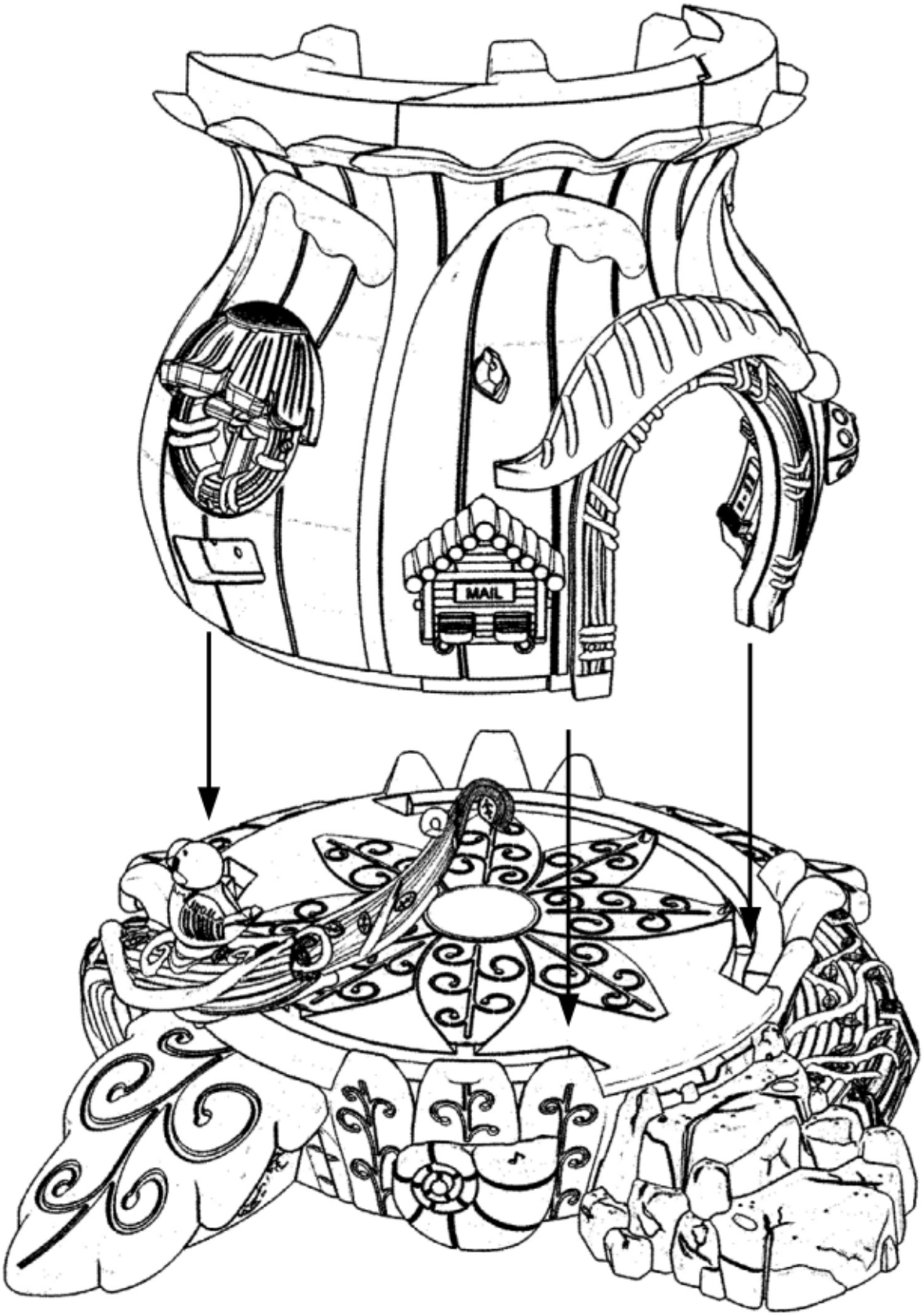

7

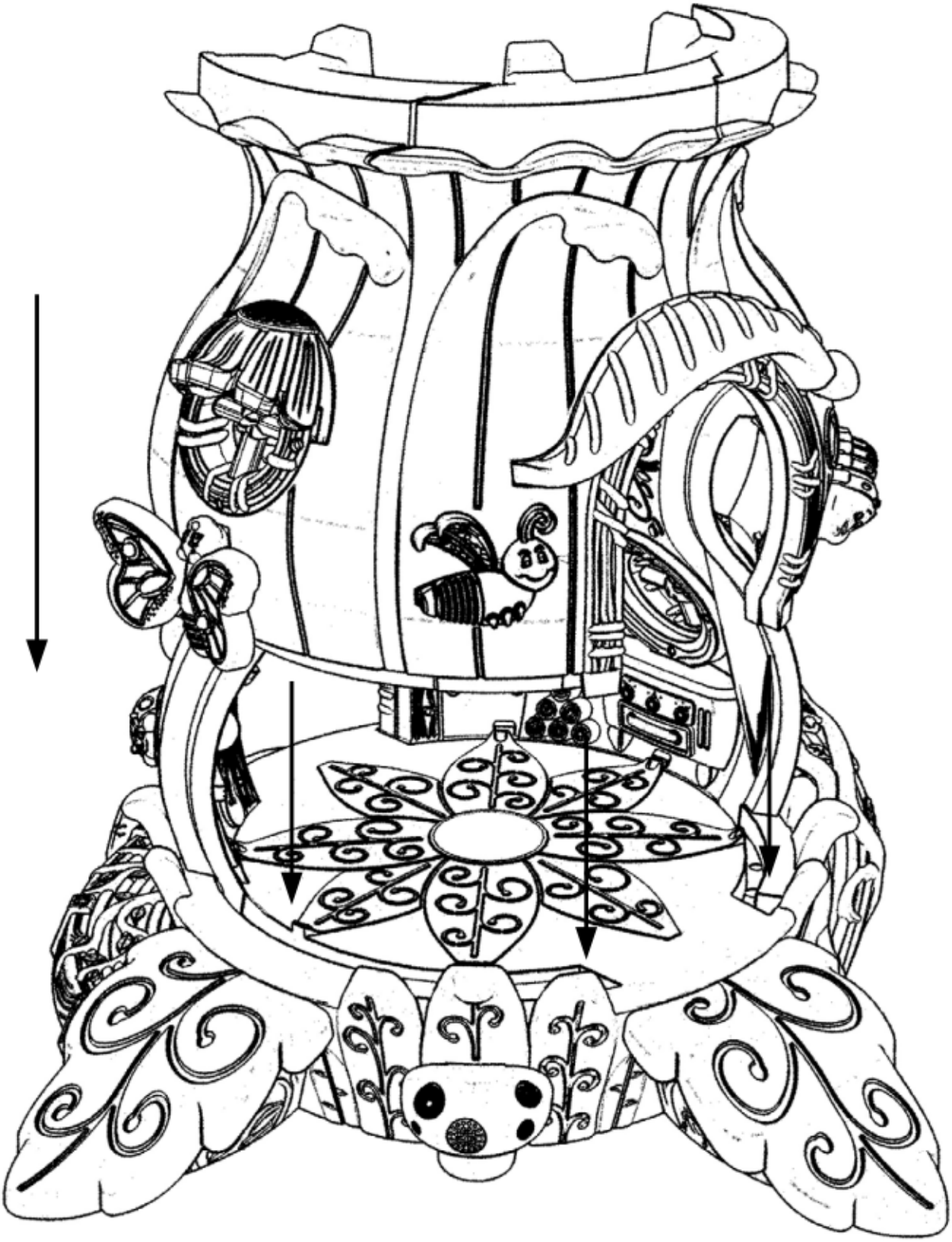

8

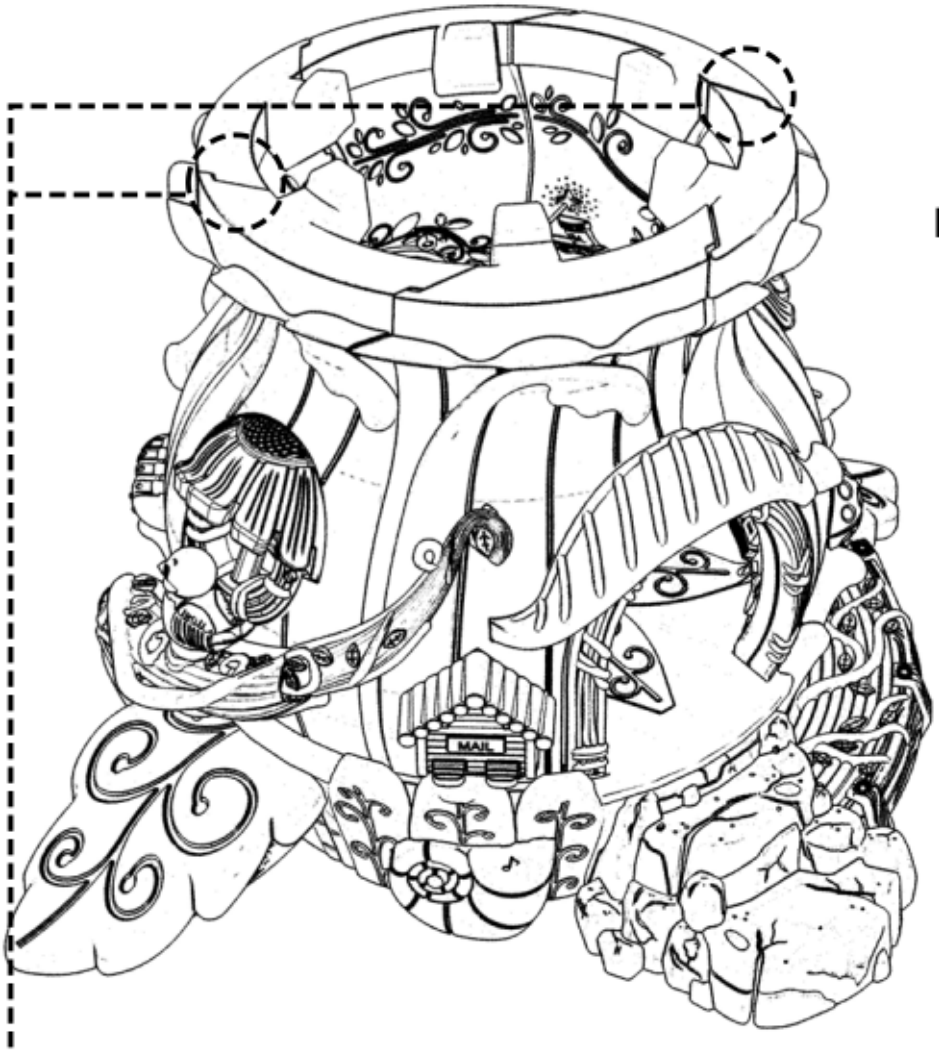

Hardware Needed:

E x2

G x4

H x2

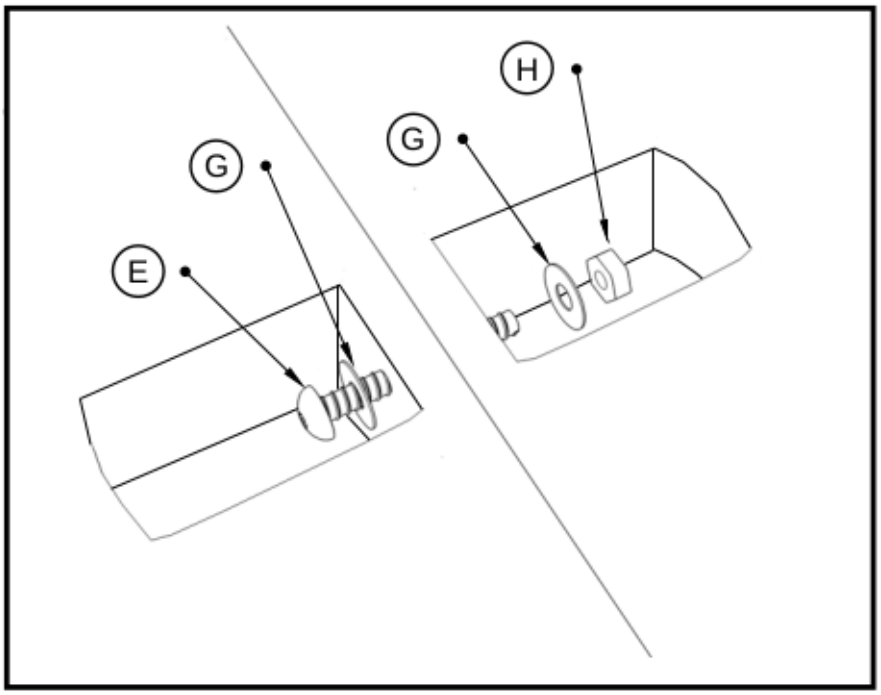

9

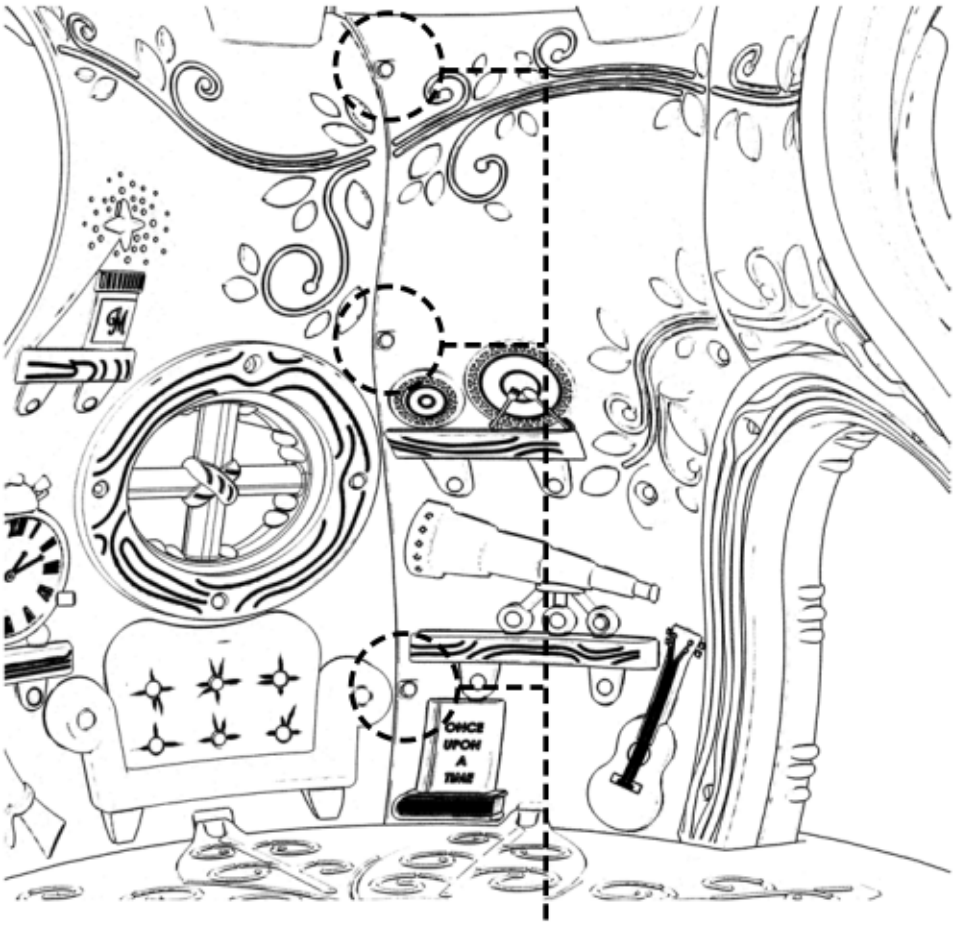

Hardware Needed:

- B x6
- G x6
- J x6

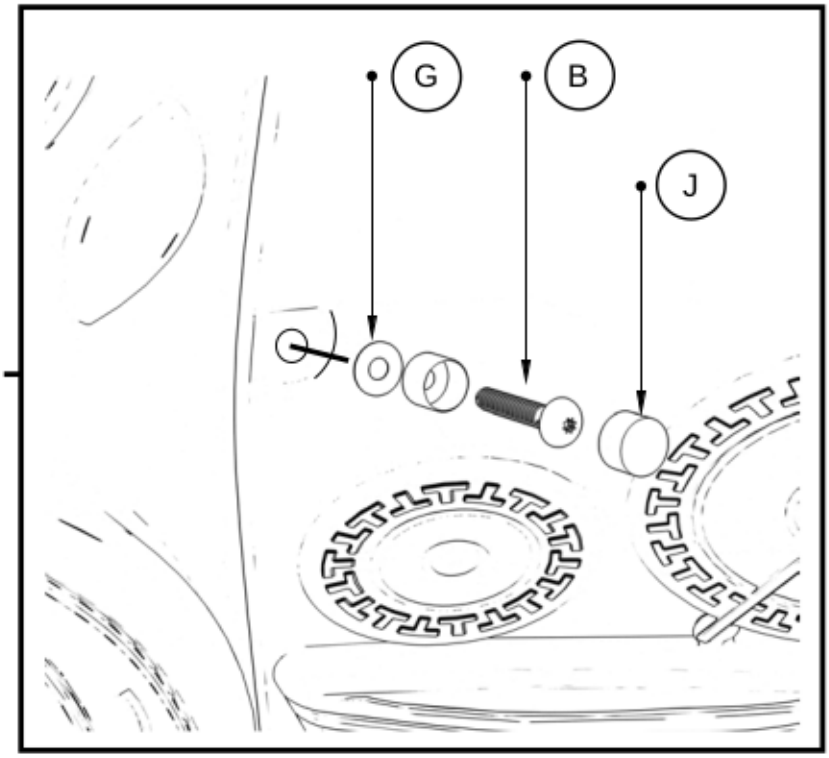

10

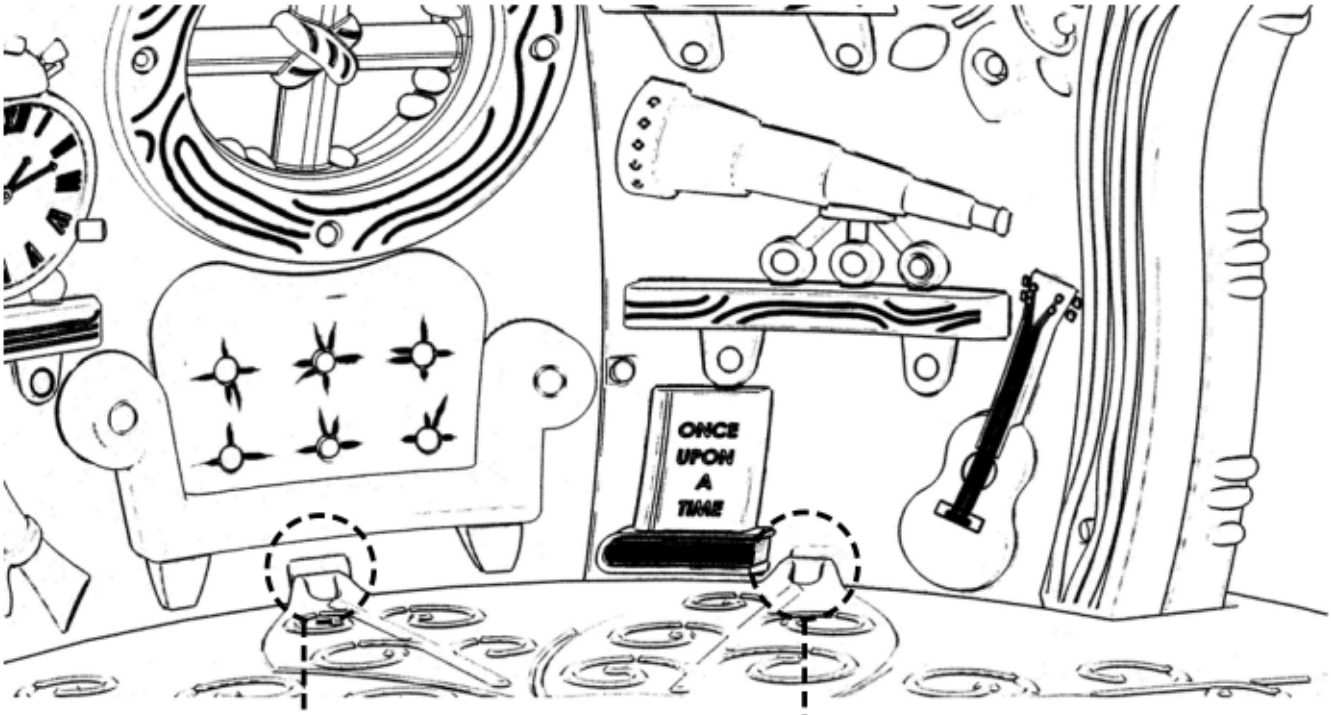

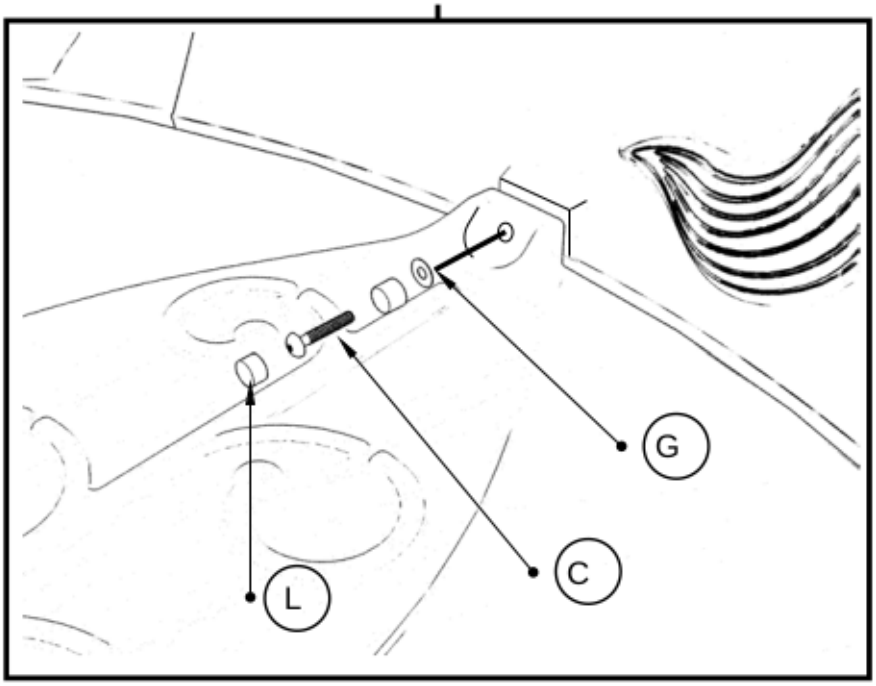

Hardware Needed:

C x6

G x6

L x6

11

Hardware Needed:

- C x1
- F x3
- G x4
- J x4

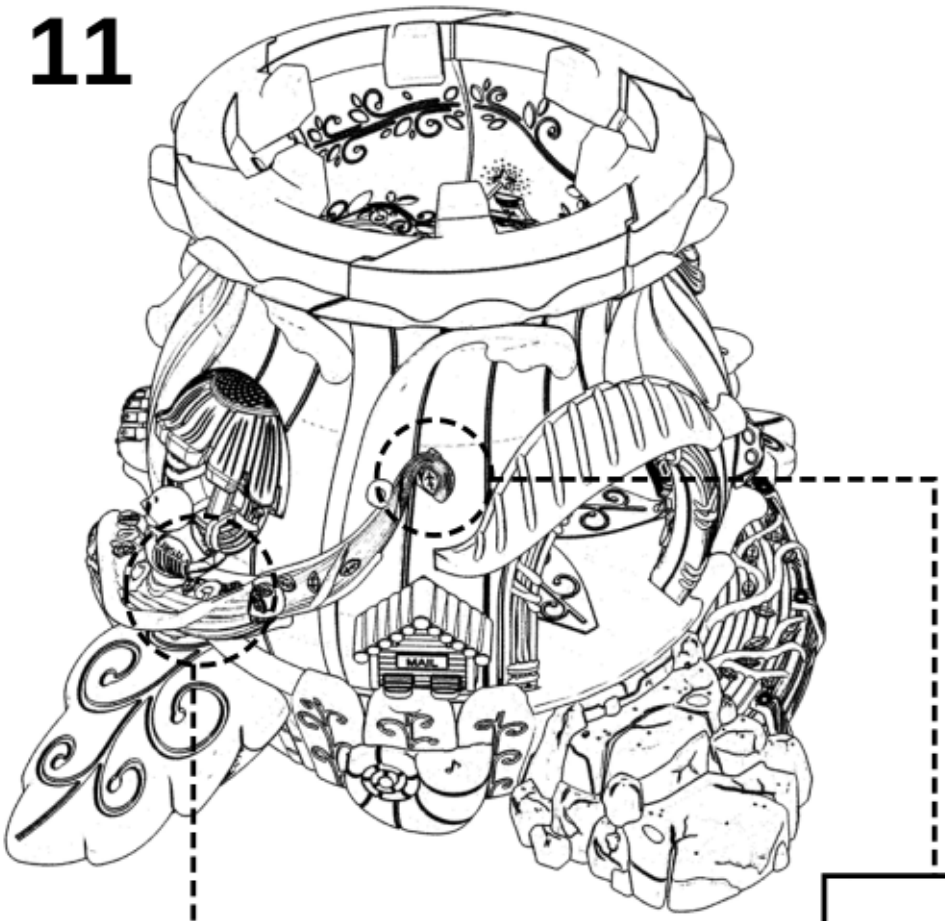

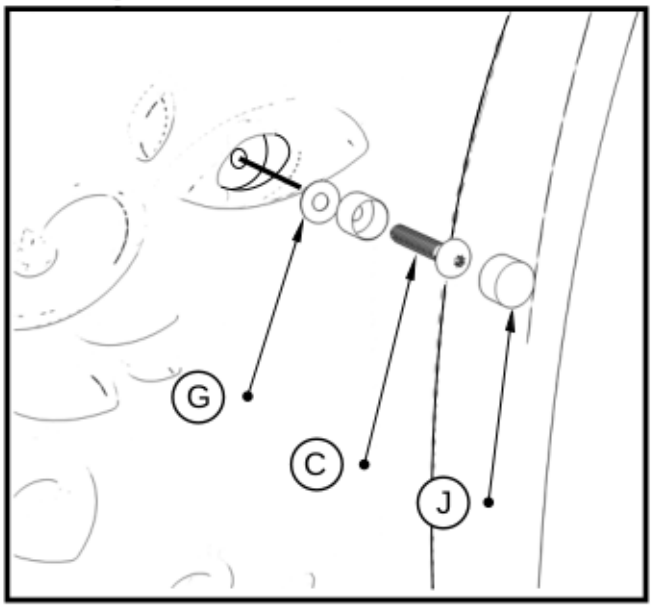

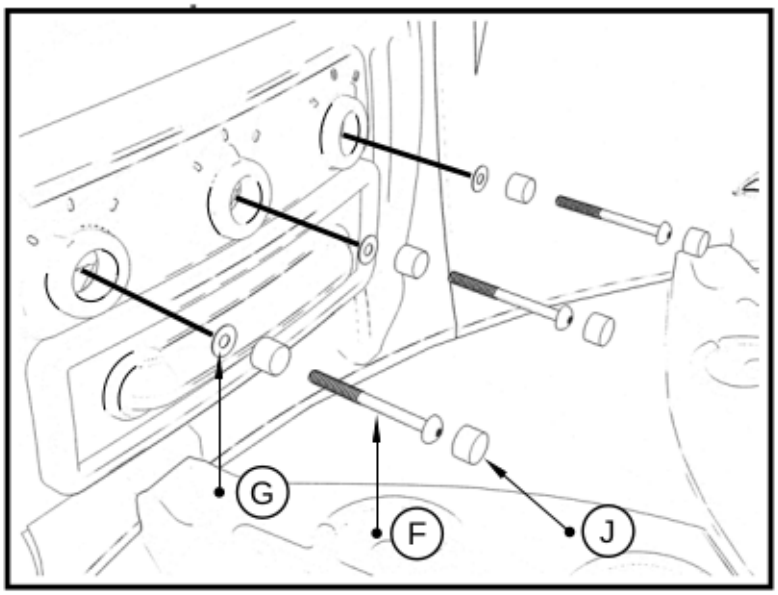

12

Hardware Needed:

- D x6
- G x8
- I x2
- K x6
- L x2

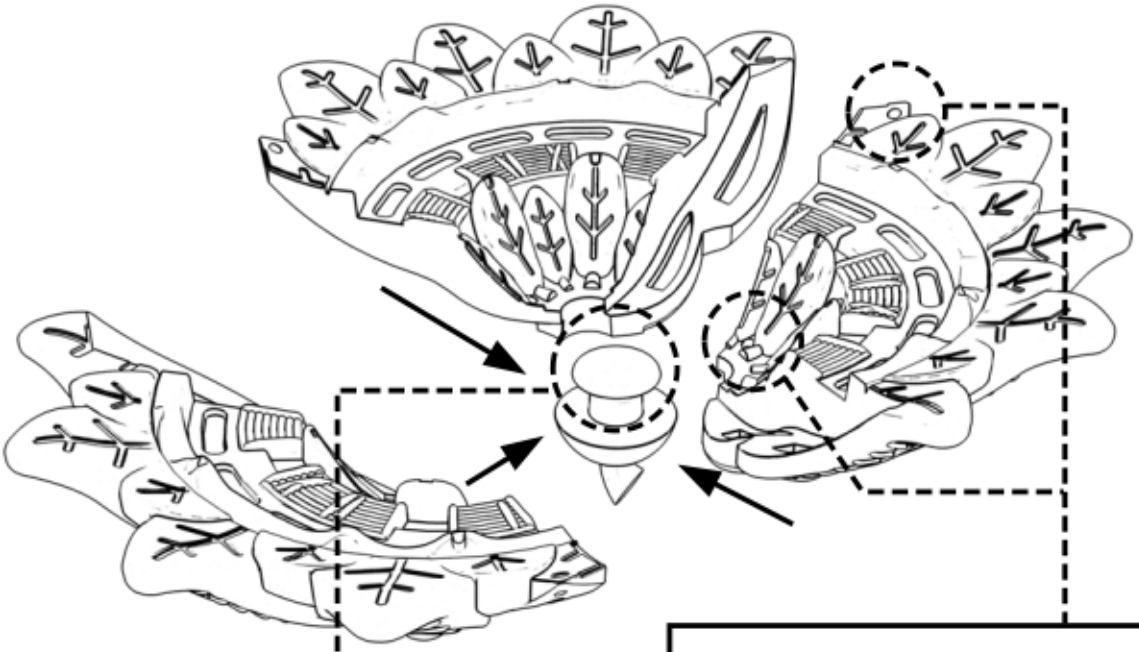

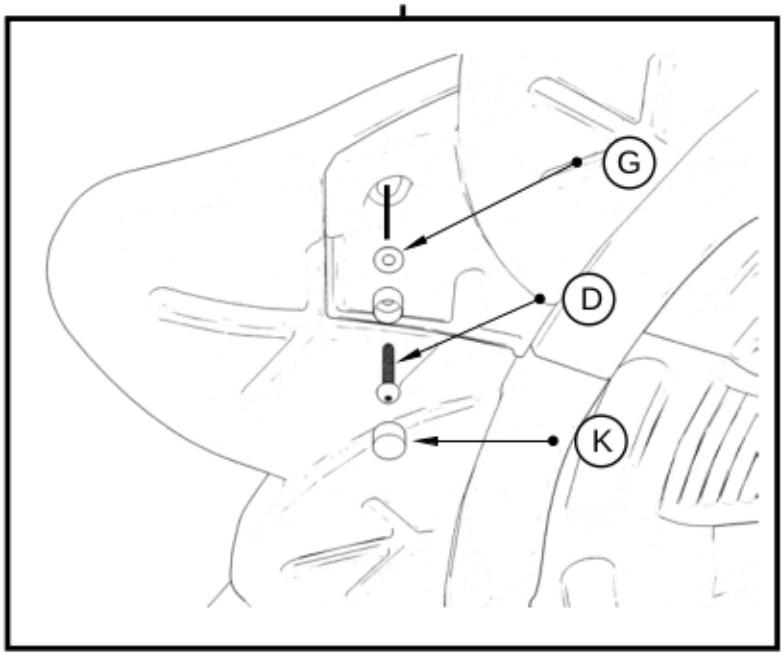

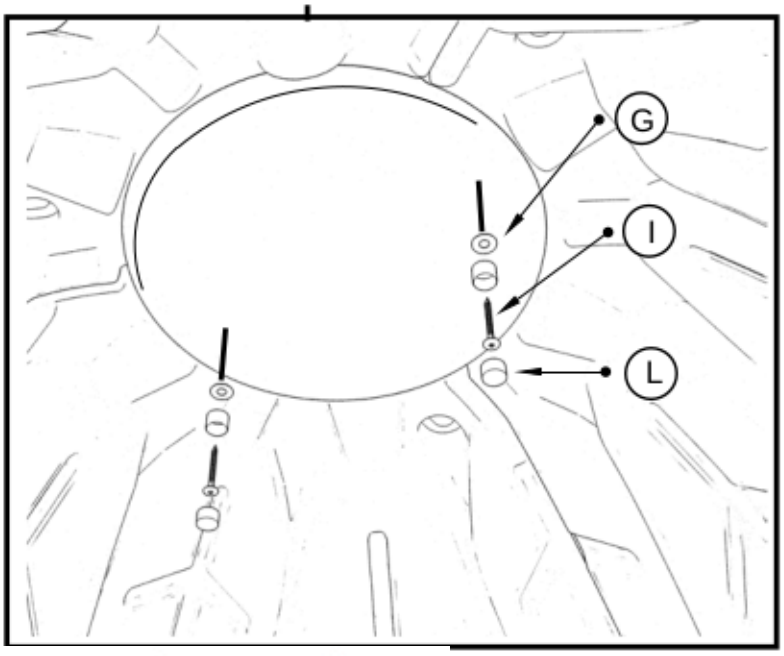

13

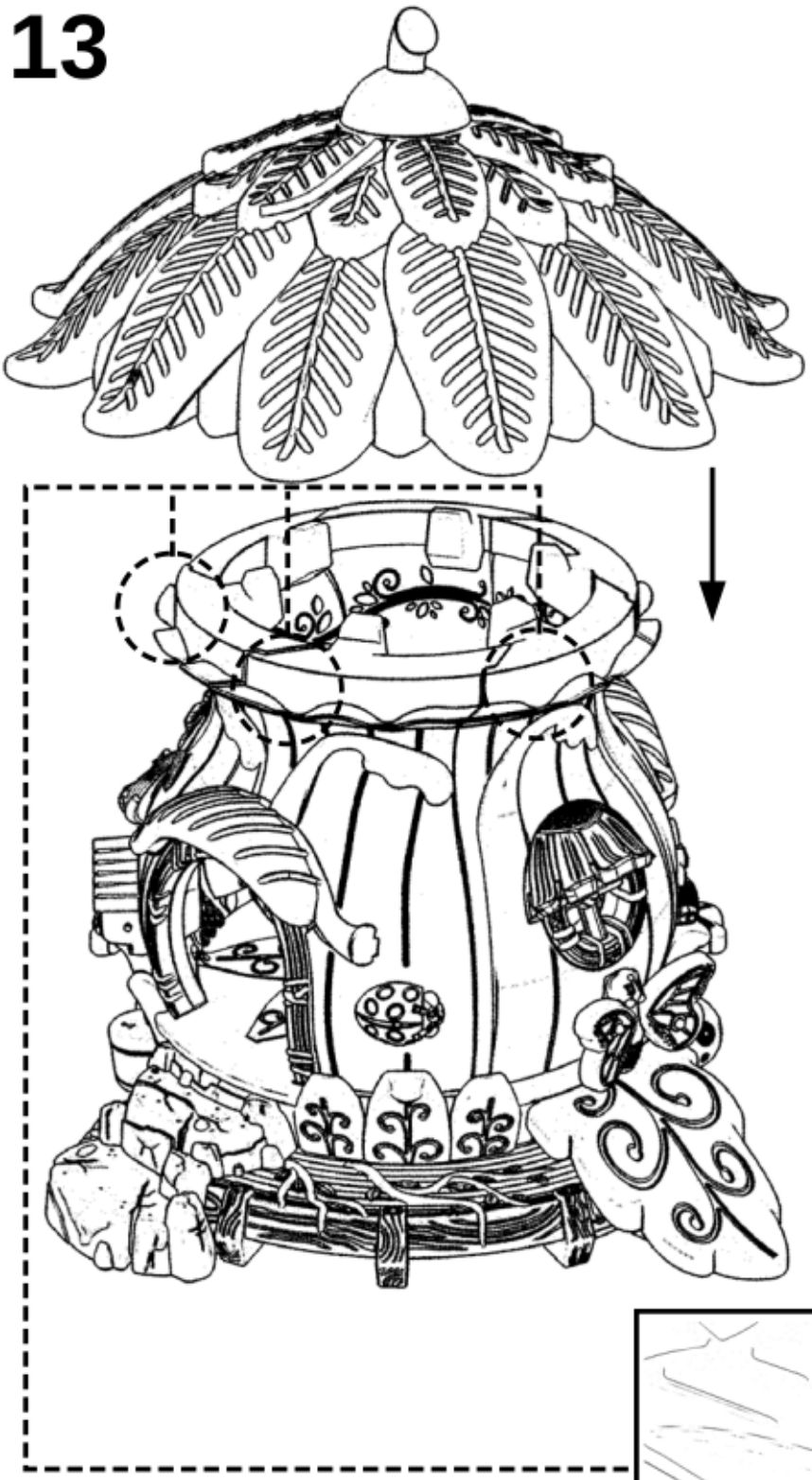

Hardware Needed:

C x6

G x6
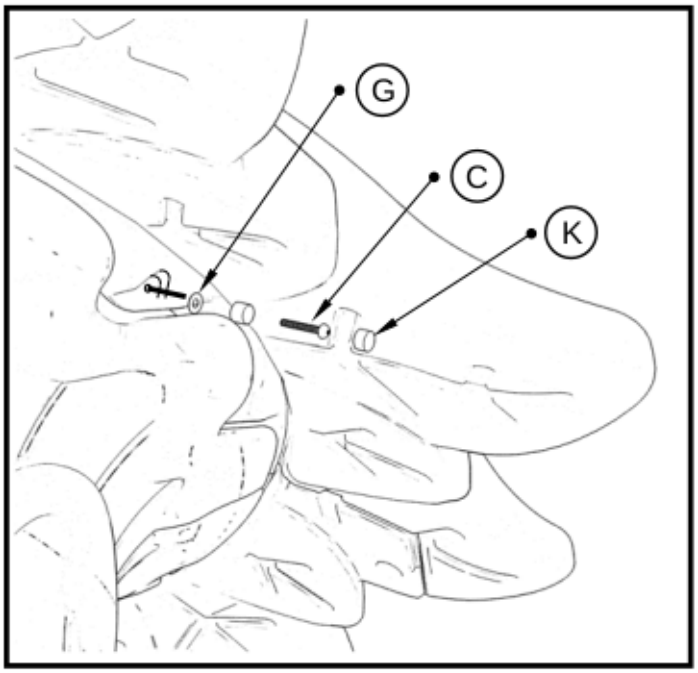
K x6